Wireless PM2.5 Air Quality Sensor

Model: WH41

Contents

1. Introduction 3
2. Get Started 3
    2.1 Parts List 3
3. Overview 4
4. Setup Guide 5
5. Mounting 6
6. Wi-Fi Configure with gateway 10
    6.1 Pair with Gateway 10
    6.2 Wi-Fi Connection for the Gateway 11
7. View Online Data on WS View Plus 11
8. Appendix 12
9. Specification 13
10. Warranty Information 15

*Please scan the QR code to read English manual and keep it for future reference

*Bitte scannen Sie den QR-Code zudeutsche Anleitung lesen und aufbewahren füZukunftsbezug

*Si prega di scansionare il codice QR perleggi il manuale italiano e conservalo perReferenza futura

Instruction manuals

https://www.ecowitt.com/support/download/58

Help

Our product is continuously changing and improving, partic ularly online services and associated applications. To downl oad the latest manual and additional help, please contact our technical support team:

support@ecowitt.com

support.eu@ecowitt.net (EU/UK)

MADE IN CHINA

EC	REP	AC WORKS CONSULTING Srl Via Vilfredo Pareto 125,47521 Casena(FC),ITALY

UK	AR	HUA TENG LIMITED 3 Glass Street, Hanley, Stoke On Trent, ST1 2ET United Kingdom

1. Introduction

Thanks for your purchasing this WH41 wireless PM2.5 air quality sensor. This device measures PM2.5 content in the air. The data can be streamed by Wi-Fi Gateway (sold separately) and can be viewed on our WS View Plus mobile application after the Wi-Fi configuration done. This sensor has a dedicated console (wh0290) for displaying the sensor data display. Also with HP2500, wh2680, WN1900 consoles, they can also receive data from this sensor and push data to www.ecowitt.net cloud data hosting service.

To ensure the best product performance, please read this manual and retain it for future reference.

2. Get Started

2.1 Parts List

One PM2.5 Sensor
One USB Cable
One User Manual
Two Ni-MH Rechargeable Batteries

3. Overview

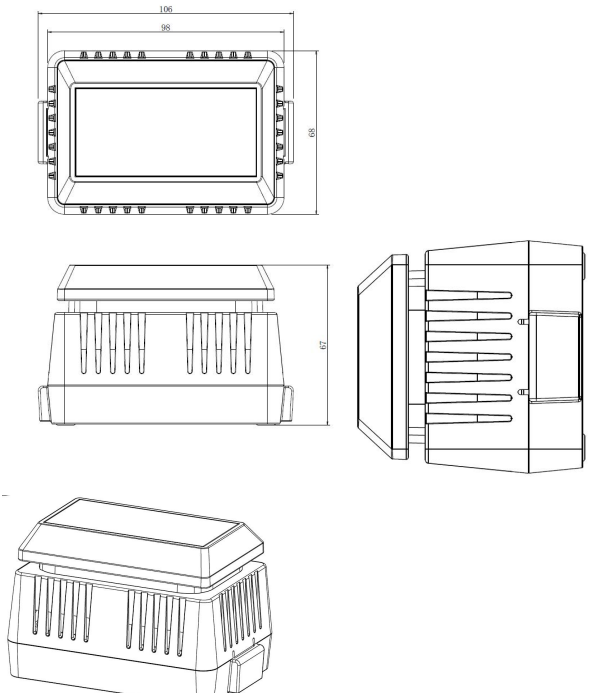

Figure 1

1 Solar panel
2 Battery Compartment Cover

3 Red LED Indicator (RF transmission)
4 Blue LED Indicator (charging status)
5 USB Port
6 Battery Compartment

4. Setup Guide

1. Remove the battery door on the base of the air quality sensor.
2. Insert two rechargeable AA batteries.
3. After inserting the batteries, the remote sensor (red) LED indicator will light for 4 seconds, and then flash once per 10 minutes thereafter. Each time it flashes, the sensor is transmitting data.
4. Close the battery door.
5. Connect the USB cable to a standard USB power adapter (not supplied) and charge battery until blue LED is turned off, indicating batteries are fully charged.
6. Without the help of sufficient solar radiation, a fully charged set battery can last for about 20 days(about 500hours), and battery status monitor on display will reflect the battery power status. When battery is empty, please charge sensor again to avoid a complete battery discharge which is bad for maintaining its charging performance.
7. When battery is empty, system will stop air quality measurement, by then there will be no air quality

data measured but sensor sends out last measured data all the time. If you see a not-changing PM2.5 value against low battery indicator, this means sensor need to be charged immediately.

5. Mounting

Before you mount

Before proceeding with the outdoor mounting detailed in this section, you may want to skip to Wi-Fi configuration instructions in section 6 and onwards first, while you keep the assembled outdoor sensor package nearby (although preferably not closer than 5 ft from the gateway). This will make any troubleshooting and adjustments easier and avoids any distance or interference related issues from the setup.

After the WIFI configuration is completed and everything is working, return here for outdoor mounting. If issues show up after outdoor mounting they are almost certainly related to distance, obstacles etc.

Spiders are extremely liking to make their home inside the air sensing tunnel, and once there was a spider net built, then the sensor will not have air flow to detect air particles. Spray insect compelling when it is necessary. When this happened(0 reading all the time and battery status is healthy), please try to use a

can of compressed air to blow inside the sensor tunnel to see if it is possible to blow out the spider net.

Outdoor Installation

Use four screws to fix the base of the sensor on a flat surface. **The sensor should not be installed so that it is exposed directly to outdoor rain.** It is recommended to place it under the awning and raised 1M above ground level, so that each day a few hours direct sun light or scattered light reaching to the sensor for charging up the batteries. The solar panel is optimized for higher charging efficiency at lower sun lights intensity.

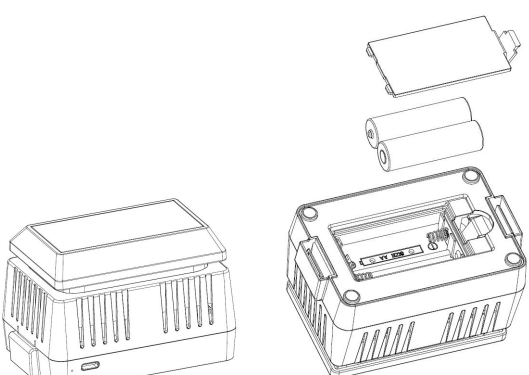

Routine Service Procedure

The sensor works with a fan for air inspiration, thus it is easy for dusts being accumulated at the sensor air entrance. Also insects like spiders, ants likes finding their home inside the air path tunnel which is an ideal location for their easy home. So it is important to check out the sensor for possible dust built up or insects intrusion. Please make check up every 3 months in operation. The disassembling procedure can be done in this procedure:

1) Remove the unit from the mount, pinching the white tabs
2) Remove the batteries
3) Pinch the black tabs, and gently slide the sensor away from the case, there is a wire connected to the solar cell, so do this gently and leave the wire intact. It has enough play to allow you to work on the unit
4) Flip over the central unit, carefully.
5) Remove 3 black rubber covers that hide 3 screws, use a small screwdriver or another tool to get access
6) Remove the 3 hidden screws
7) Separate the sensor cover from the body
8) Gently, pull up on the fan, it will separate and the wires have enough play. Remember the orientation of the fan

9) You will now be able to see the interior of the sensor. "gently" blow it out with an air duster, or even compressed air can be considered in case the dust is built deep inside.
10) Reverse procedure and assemble the unit

Best Practices for Wireless Communication

Wireless communication is susceptible to interference, distance, walls and metal barriers. We recommend the following best practices for trouble free wireless communication.

1. **Electro-Magnetic Interference (EMI)**.
   Keep the console several feet away from computer monitors and TVs.
2. **Radio Frequency Interference (RFI).**
   If you have other 915/433/868 MHz devices(same frequency with your device) and communication is intermittent, try turning off these other devices for troubleshooting purposes. You may need to relocate the transmitters or receivers to avoid intermittent communication.
3. **Line of Sight Rating.**
   This device is rated at 300 feet line of sight (no interference, barriers or walls) but typically you will get 100 feet maximum under most real-world installations, which include passing through barriers

or walls.

4. **Metal Barriers.**
   Radio frequency will not pass through metal barriers such as aluminum siding. If you have metal siding, align the remote and console through a window to get a clear line of sight.

6. Wi-Fi Configure with gateway

This PM2.5 sensor doesn't have a display function and you need to use our WS View Plus App to view the data on your mobile application after pairing this device with our Wi-Fi Gateway (sold separately).

Note: This PM2.5 sensor works with WH0290 Air Quality Monitor display console (sold separately) and HP2551 WIFI Weather Station console (sold separately). The sensor and display console should be at the same frequency.

6.1 Pair with Gateway

If Wi-Fi Gateway has been in operation, and you have never had any WH41 PM2.5 sensor setup before, just power up the sensor and Wi-Fi Gateway will pick PM2.5 data automatically.
If a PM2.5 sensor has been hooked on Wi-Fi Gateway before, and you have a new PM2.5 sensor to replace

the old one, unplug Wi-Fi Gateway from USB socket and power up again, then the new sensor will be learned and old sensor will be erased.

6.2 Wi-Fi Connection for the Gateway

For this part, please refer to the manual of the Wi-Fi gateway.
Any question, please contact the customer service.

7. View Online Data on WS View Plus

When the Wi-Fi configuration is done, you can view the live data of your PM2.5 sensor on the WS View Plus application.

Note:

1. The PM2.5 data can be only viewed on the Live Data interface since it doesn't support uploads to weather underground.
   If you choose to upload the data to www.ecowitt.net, you can view the history graph on the website.
2. This PM2.5 sensor works with WH0290 Air Quality Monitor display console(sold separately). The sensor and display console should be at the same frequency.

8. Appendix

About the Air Quality Levels

AQI	Air Pollution Level	PM2.5 Concentration (ug/m3, 24-hour average)	Health Implications	Cautionary Statement (for PM2.5)
0 - 50	Good	0.0-12.0	Air quality is considered satisfactory, and air pollution poses little or no risk	None
51 -100	Moderate	12.1-35.4	Air quality is acceptable; however, for some pollutants there may be a moderate health concern for a very small number of people who are unusually sensitive to air pollution.	Active children and adults, and people with respiratory disease, such as asthma, should limit prolonged outdoor exertion.

101-150	Poor	35.5-55.4	Members of sensitive groups may experience health effects. The general public is not likely to be affected.	Active children and adults, and people with respiratory disease, such as asthma, should limit prolonged outdoor exertion.
151-200	Unhealthy	55.5-150.4	Everyone may begin to experience health effects; members of sensitive groups may experience more serious health effects	Active children and adults, and people with respiratory disease, such as asthma, should avoid prolonged outdoor exertion; everyone else, especially children, should limit prolonged outdoor exertion
201-300	Severe	150.5-250.4	Health warnings of emergency conditions. The entire population is more likely to be affected.	Active children and adults, and people with respiratory disease, such as asthma, should avoid all outdoor exertion; everyone else, especially children, should limit outdoor exertion.
300+	Hazardous	250.5+	Health alert: everyone may experience more serious health effects	Everyone should avoid all outdoor exertion

9. Specification

Measurement	Range	Accuracy	Resolution
PM 2.5	0~999ug/m3	0-100ug/m3， ±10 ug/m3； 100-500 ug/m3，±10% (at 20°C ±5°C)	1ug/m3

Transmission distance in open field: 100m (300 feet)
Frequency: 433/868/915MHz depending on location (North American:915MHz; Europe:868MHz; Other areas:433MHz)
Sensor reporting interval: 10 minutes

Power consumption

PM2.5 sensor: 2 x AA 1.2V LSD type NI-MH batteries (included)
Solar panel for backup power

Note:

1. Battery type for charging: 2 x AA 1.2V NI-MH batteries(battery life: 3 weeks)
2. It's recommended to recharge the outdoor sensor every two weeks.
3. Charge time: 3h (The blue LED indicator will light when in charge and be off when full charged)
4. Charge Method: USB charge(USB Cable included)
5. Note: A battery power icon will display on the APP to indicate the battery status of the sensor.

10. Warranty Information

We disclaim any responsibility for any technical error or printing error, or the consequences thereof.

All trademarks and patents are recognized.

We provide 8 months limited warranty on this product against manufacturing defects, or defects in materials and workmanship, as this sensor is vulnerable to outdoor insects and dust build up. **The warranty is not applied to the rechargeable batteries attached.**

This limited warranty begins on the original date of purchase, is valid only on products purchased, and only to the original purchaser of this product. To receive warranty service, the purchaser must contact us for problem determination and service procedures.

This limited warranty covers only actual defects within the product itself and does not cover the cost of installation or removal from a fixed installation, normal set-up or adjustments, or claims based on misrepresentation by the seller, or performance variations resulting from installation-related circumstances.